REF. IOM-1560-1567

INSTALLATION OPERATING MANUAL RUBBER EXPANSION JOINT TEGUFLEX P

Rubber expansion joint Teguflex with swiveling flanges to absorb vibrations and noises.
Carbon steel dichromate zinc plated or AISI 316 flanges.
For linear and angular compansion.
130 mm long for all DN.

Size :	DN25 to DN300
Connection :	Flanges PN10/16
Min Temperature :	-35°C (according to the type)
Max Temperature :	+150°C (according to the type)
Max Pressure :	16 Bars
Specifications :	Absorb vibrations and noise Linear and angular compansion
Materials :	Dichromate zinc plated steel flanges or AISI 316

REF. IOM-1560-1567

INSTALLATION OPERATING MANUAL RUBBER EXPANSION JOINT TEGUFLEX P

SPECIFICATIONS :

- Absorb vibration, noises and expansion
- Linear and angular compansion
- 130 mm length
- Dichromate zinc plated steel or AISI 316 swiveling flanges
- PN10/16 up to DN150, PN10 over
- On request, PN6, PN16 and Class 150 PN20 flanges
- AISI 316 Ti vacuum ring on request (Ref.9815050 to 9815300)
- Inner liner PTFE on request (movements allowed by the expansion joints are then reduced by 50 % and pressure max is 6 bars)
- Bursting pressure >50 bar at 20°C, Test pressure 25 bar at 20°C

USE :

Ref.	Ref. Color	Internal material	External material	Max Temp.	Max Pressure	Application
1560	Red	EPDM	EPDM	90°C at 10 bars	16 bars at 70°C	**WATER** Hot water, cooling water with salt solutions, chlorine solutions, esters and ketones
1561	Red White	EPDM ACS	EPDM	90°C at 10 bars	16 bars at 70°C	**ACS** Drinking water
1562	Double Red	EPDM HP	EPDM	130°C at 10 bars up to DN150, 130°C at 6 bars over	16 bars at 100°C up to DN150, 16 bars at 70°C over	**STEAM 130°C** Hot water, steam, hot air up to 130°C
1563	Yellow	ECO	ECO	90°C at 10 bars	16 bars at 70°C	**OIL** Water, salt water, alkalis, mineral oils, vegetal and animal oils, oils aerosols, butane or propane, gas
1564	Green	CSM	CR	90°C at 10 bars	16 bars at 70°C	**CHEMICAL** Strong and/or concentrated acids, compressed air that bears oil aerosols, chemical products, mineral oil, grease and solvent
1565	White	NBR WHITE (FDA)	ECO	90°C at 10 bars	16 bars at 70°C	**FOOD** Food and beverages, included fats and oils
1566	Blue	SBR	CR	90°C at 10 bars	16 bars at 70°C	**ABRASION** Abrasive materials, wearing material such as sludge suspended stones, calcium
1567	Double Purple	FKM	FKM	150°C at 8 bars up to DN150, 6 bars over	16 bars at 90°C up to DN150, 8 bars at 70°C over	**CHEMICAL HIGH TEMPERATURE** Highly aggressive chemicals products at high temperature, hydrocarbons, aromatic solvent up to 150°C
1568	Double Yellow 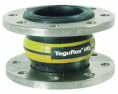	HNBR	HNBR	110°C at 10 bars up to DN150, 6 bars over	16 bars at 90°C up to DN150, 16 bars at 70°C over	Oils, mixed Water/oil, mixed compressed air/oil etc…

REF. IOM-1560-1567

INSTALLATION OPERATING MANUAL RUBBER EXPANSION JOINT TEGUFLEX P

MAXIMUM VACUUM :

DN	25/32	40	50	65	80	100	125	150	200	250	300
Vacuum (bar)	-0.8	-0.8	-0.7	-0.6	-0.5	-0.5	-0.4	-0.3	-0.3	-0.2	-0.2

MOVEMENTS (in mm) :

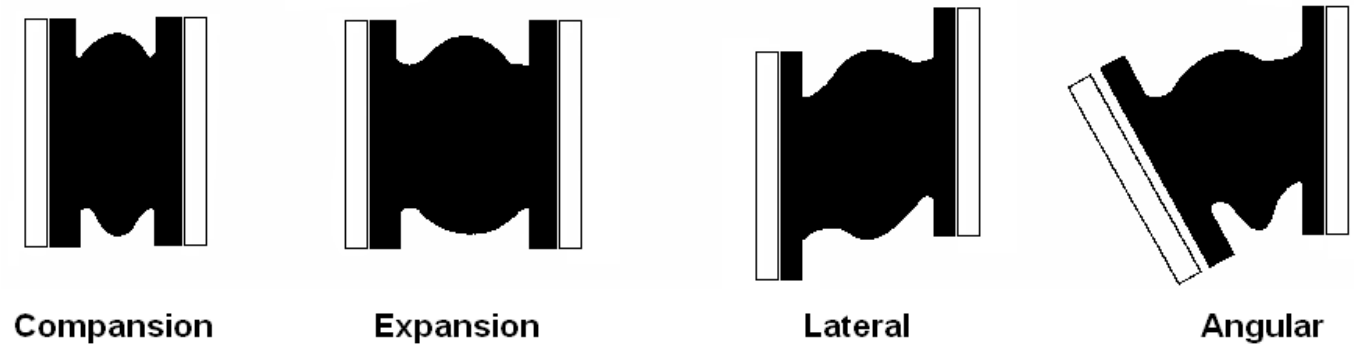

DN	25-50	65	80	100	125	150	200	250	300
Compansion	30	30	30	30	30	30	30	30	30
Expansion	20	20	20	20	20	20	20	20	20
Lateral	20	20	20	20	20	20	20	20	20
Angular	35°	30°	30°	25°	25°	15°	15°	10°	10°

Maximum movements can't be applied simultaneously.
For example, with an expansion of 15mm, the maximum lateral movement will be 8 mm :

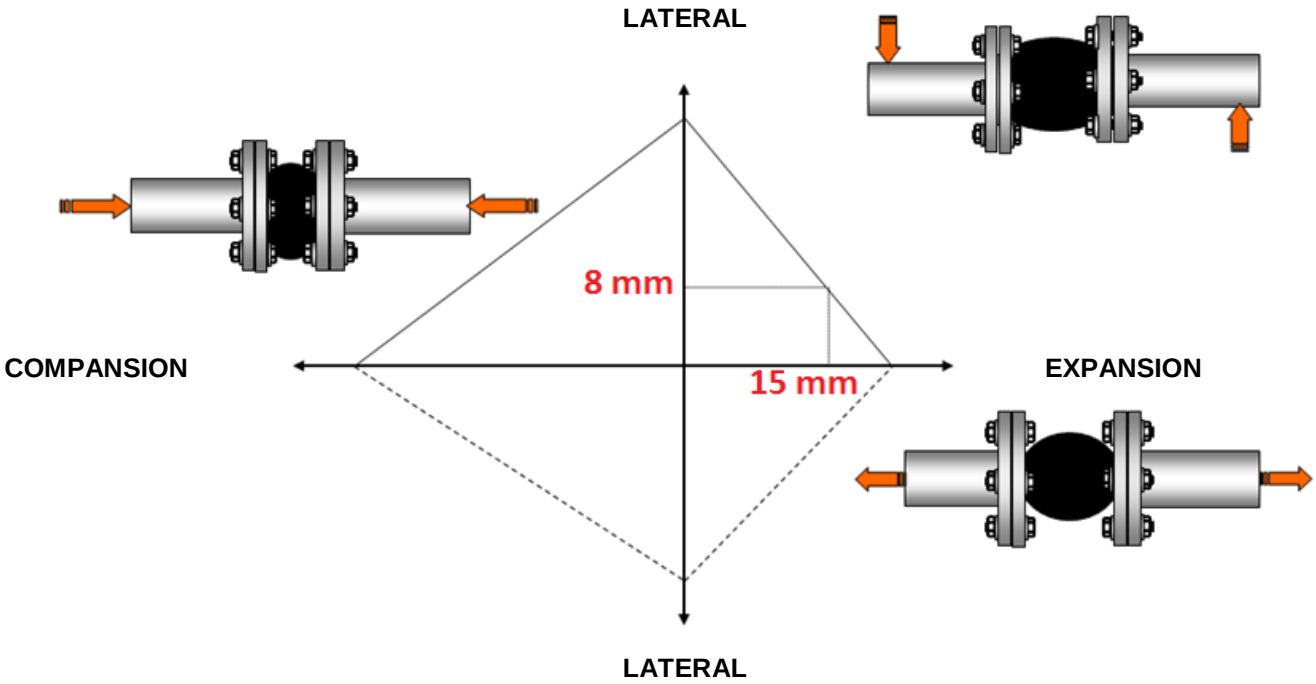

REF. IOM-1560-1567

INSTALLATION OPERATING MANUAL RUBBER EXPANSION JOINT TEGUFLEX P

INSTALLATION INSTRUCTION 1/5 :

Key factors for installation

Rubber expansion joints are supplied ready for installation. Following advises are However to be taken into consideration in order to obtain a good performance and prolonged service life of the expansion joint.

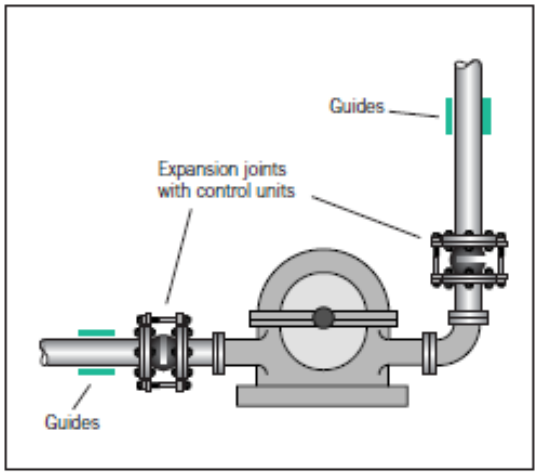

Pressure-restrained expansion joint on pump (with tie bar). Absorb vibrations and thus relieve pressure on the machine housing.

Fixed points

An expansion joint acts as a piston by the forces arising from the internal pressure. To prevent the pipes from damage they are to be properly anchored in order to take care of these reaction forces (Fr). The reaction force of an expansion joint is calculated by the following formula:

Fr = A x P x 0,01

Fr = Reaction force in kN.

A = effective cross sectional area in cm^2.

P = actual pressure in bar or kp/cm^2.

Installation

The turnable metal flanges make installation easier and eliminate twist.
The low inherent rigidity of expansion joints make for easier accommodation of installation dimensions.The expansion joints shall be easily accessible and open to regular supervision.
It is recommended to let the expansion joints work in compression rather than stretching.
Torsion is not permitted. Check the permissible movements, temperature, pressure and proper rubber quality before installation!

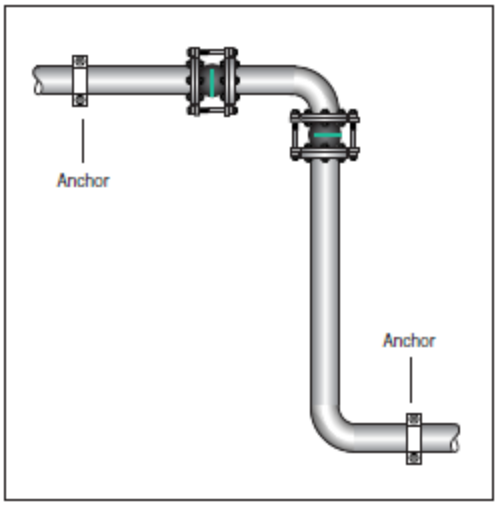

Arrangement with lateral expansion joints

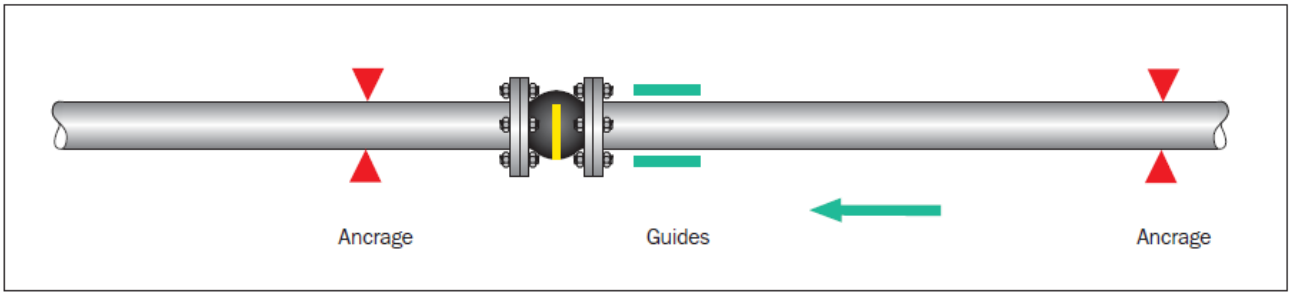

INSTALLATION OPERATING MANUAL RUBBER EXPANSION JOINT TEGUFLEX P

INSTALLATION INSTRUCTION 2/5 :

Expansion joint are designed for the absorption of previously specified movements under specific pressure and temperature conditions.
So that the maximum service life is achieved, the following items must be observed during installation.

- Prior to fitment of the compensator it must be ensured that :
  - The route of the pipeline is straight - The expansion tallies with that of the chosen compensator
  - The expansion tallies with that of The chosen compensator
  - The fixes points are dimensionned so that they can absorb the reaction forces and stiffness rate that arise during use.
  - The pipeline is limited by fixed points
  - The distance between compensator and bearing may be a maximum of 3 times the pipe diameter. Place only one compensator between 2 bearings.

- Each pipe elbow must be fixed by support, specially if compensator is mounted with limiters.
  Fixed bearings are necessary because compensator is submitted to expansion when it is under pressure.

- Expansion joint must not be painted and heat-insulated. It must be protected from bad weather and solar radiation.

- During assembly operation, make sure screws are oriented according to the graph out below :

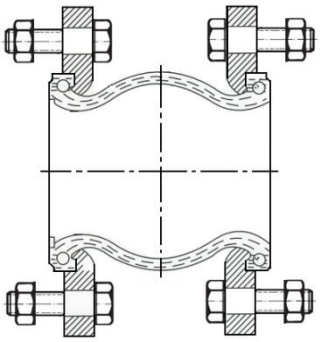

- Please apply the following stages order :

  a) Fixed points for above pipeline
  b) Fixed points for down pipeline
  c) Compensator mounting

- Installation layout :

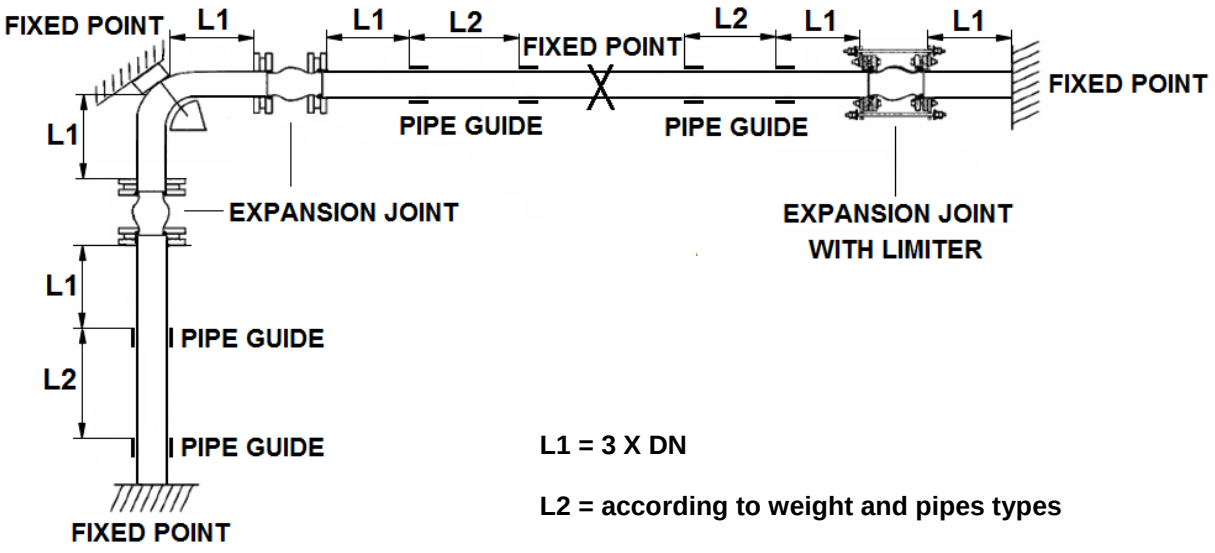

L1 = 3 X DN

L2 = according to weight and pipes types

INSTALLATION OPERATING MANUAL RUBBER EXPANSION JOINT TEGUFLEX P

INSTALLATION INSTRUCTION 3/5 :

- Check the expansion joint are not loaded by the weight of the piping and are not subjected to a deformation exceeding the values given in compression, extension or shear. The precompression should not exceed 5 mm. Take particular care not to twist the compensator, this being an important risk factor for failure over time.

- The expansion joint must be checked regularly, not be insulated or painted. Bolt tightening should not be over-tightened and checked very regularly.

<table>
<tr><th>DN</th><th>Pre-tightening torque (Nm)</th><th>Final tightening torque (Nm)</th></tr>
<tr><td>25</td><td rowspan="12">50</td><td rowspan="6">80</td></tr>
<tr><td>32</td></tr>
<tr><td>40</td></tr>
<tr><td>50</td></tr>
<tr><td>65</td></tr>
<tr><td>80</td></tr>
<tr><td>100</td><td rowspan="6">100</td></tr>
<tr><td>125</td></tr>
<tr><td>150</td></tr>
<tr><td>200</td></tr>
<tr><td>250</td></tr>
<tr><td>300</td></tr>
</table>

- Sealing rubber face on the counter flange must be perfect on all the contact face

- Avoid collar because of their insufficient safety. Sealing faces must be clean.

INSTALLATION OPERATING MANUAL RUBBER EXPANSION JOINT TEGUFLEX P

INSTALLATION INSTRUCTION 4/5 :

Mounting

- In order to provide the movement capabilities indicated in the technical specifications, the assembly bolts should be mounted with bolts heads towards expansion joint body. (1)
- If this is for any reason impossible, ensure that the threaded bolts project as little as possible (no more than 2 or 3 mm) to avoid damage to the body.
- Tightening must be progressive and crosswise in diagonal sequence with bolting pressure evenly distributed.
- The design of the expansion joints secures a sealing to the counter flange. That is why no sealing gasket is required.

Note: If the bolts and nuts are tightened too strongly, the sealing face might be crushed causing improper function!

Counter flanges

It is very important for the safe operating and life expectancy of the expansion joint to make a proper installation of the counter flanges(Fig. 2 to 5). The sealing face of the counter flange must be machined smooth and cover most of the rubber sealing face (or at least 60%) to ensure a good sealing (Fig.2).

Precaution

Do not paint or lubricate rubber parts of expansion joints!

When welding work is to take place the bellow has to be protected from welding heat and sparks!

Right

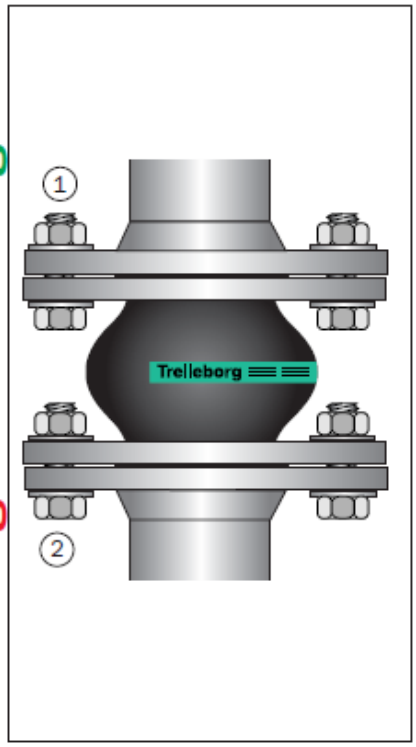

Wrong

Fig. 1

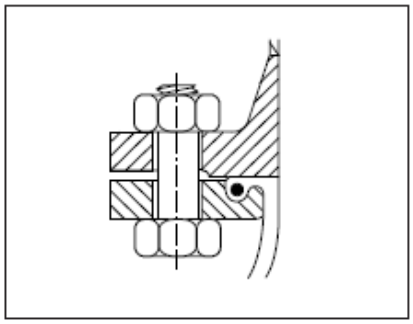

Fig. 2 Flange provided with smooth sealing surface.

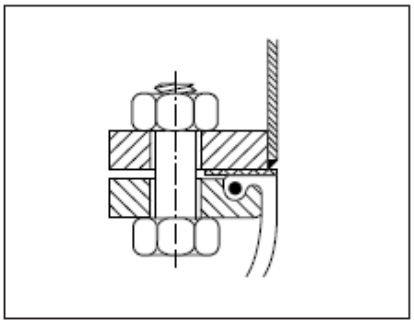

Fig. 4 Flange provided with flat sealing gasket to protect the rubber surface.

Right

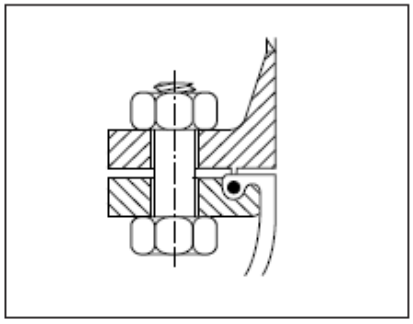

Fig. 3 Do not use flange with tongue or groove which will damage the rubber.

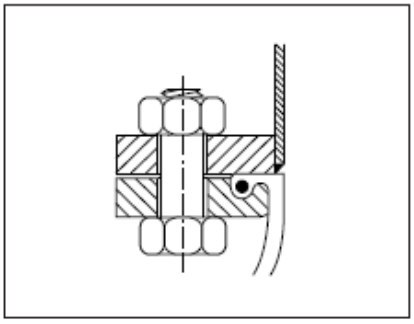

Fig. 5 Sharp edge pipe ends will damage the rubber face.

Wrong

INSTALLATION OPERATING MANUAL RUBBER EXPANSION JOINT TEGUFLEX P

INSTALLATION INSTRUCTION 5/5 :

- Check that the compensator is not subjected to the weight of the pipeline. The installation lenght must agree with the installation gap. The compensator must never be twisted. It is recommended that specific characteristics be observed during maintenance :
  - The compensator must never be painted or recovered by heat insulation
  - The tightness of the bolts must be checked often, torque recommended :
    - Pre-Tightening : 50 Nm
    - Final Torque from DN25 to DN80 : 80 Nm
    - Final Torque from DN100 to DN300 : 100Nm
  - The flanges must be perfectly cleared

- Use limiters : When the working pressure can exceed the following values :
  - Up to DN100 : 10 bars
  - From DN125 to DN250 : 9 bars
  - From DN300 to DN350 : 6 bars
  - From DN400 to DN600 : 3 bars
  - When there is some risk of high pressure (pump starting) or high temperature.

NOTA : The life of compensator can vary because of working conditions (fluids, pressure, temperature), that is why it is necessary to check it regullary.

WRONG INSTALLATION :

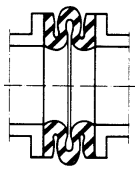

Excessive compansion

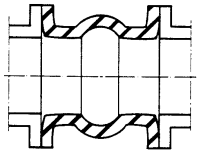

Excessive expansion

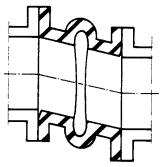

Cutting too important

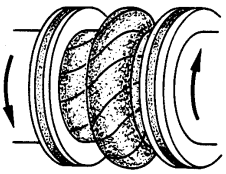

Torsion

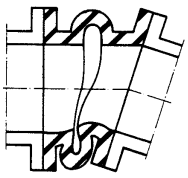

Important compansion and angular deviation

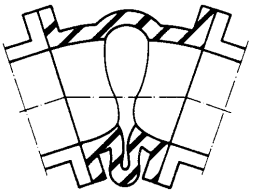

Angular deviation too important

MAINTENANCE :

Expansion joint are to be included in a maintenance plan.

• It must be perfectly accessible, in order to facilitate regular checks and possible dismantling.

• An external visual inspection (appearance, elasticity of the elastomers) and a check of the tightening of the flanges must be carried out every year on the anniversary date of commissioning.

• Every 3 years, internal control and inspection after dismantling the sleeves depending on the severity of the service conditions or the national regulations in force in the country.

• Every 7 years, systematic replacement of installed parts. The compensating sleeve should be replaced regularly depending on its condition and the hardening of the materials.